EQUATOR
Swiss made coffee machines

Chocolate Machine

Technical Manual

Art. No. : 1003761-003
Date : 2017/12
Author : SLE

Aequator AG
St. Gallerstrasse 229
CH-9320 Arbon

www.aequator.ch
sales@aequator.ch

Certificate:

Norm:

EN 50581:2012
EN 55014-1:2015
EN 55014-2:2015
EN 55022:2010

EN 60335-1:2012
EN 60335-75:2012
EN 61000-3-2:2014
EN 61000-3-3:2014

Vending Verband Schweiz
Vending Association Suisse
Vending Associazione Svizzera

Bundesverband der Deutschen
Vending-Automatenwirtschaft e. V.

European Vending Association

Speciality Coffee Association of Europe

© AEQUATOR AG

Technical changes are possible at any time without previous notice.

There is a copyright on these instructions. Reproductions and translations are only possible with written permission of the manufacturer, AEQUATOR AG.

Contents

1 INTRODUCTION 4

1.1 Safety Instructions 4

1.2 Machine View 6

1.3 Dimension 7

2 HANDLING 8

2.1 Installation 8
Unpacking the Machine 8
Water Connection 8
Electricity 8
Water Filter / Water Softener 9

2.2 Operation 10

2.3 User Menu 11
Start Up 11

2.4 Engineers' Menu 13
Technician basic / Menu 2 Default Password = 131 13
Technician advanced / Menu 3 Default Password = 331 16
Glass Cleaning 17

3 SERVICING 18

3.1 Cleaning 18

3.2 Service Work 18

3.3 Maintenance 18

3.4 Required Service Tools 18

4 ERROR MESSAGES AND HOW TO SOLVE THEM 19

4.1 Error Messages 19

4.2 Electrical Connection Diagram 20

4.3 Control Board Top View 22

4.4 Display Board Rear View 23

4.5 Water Flow Diagram 24

5 TECHNICAL DATA 26

6 DECLARATION OF CONFORMITY 27

7 YOUR SERVICE PARTNER 28

1 Introduction

Welcome to our service team. Reading this manual you will find out how easy it is to take care of this modern machine. The installation, service and repairing work must be done by a mechanical engineer authorized by Aequator.

Operating, programming, servicing and maintenance are explained in this manual. You will learn about safe and correct handling of the machine.

We do not assume any liability for damages caused by non-observance of the instructions or by improper handling of the machine.

It is impossible to treat all problems in this technical manual. If you need additional information or do not find your problem in the manual, do not hesitate to contact us at support@aequator.ch or via fax.

Generic warning

Hazard symbol High Voltage

1.1 Safety Instructions

For safety purposes, unplug the power connector for any operation inside the unit, e.g. cleaning!

To reduce to the risk of electric shock, do not remove or open cover. No user-serviceable parts inside.

The machine complies with IP20 and must be operated in dry rooms only!

This table top machine must not be operated on the floor!

The machine must be placed on a horizontal surface, not exceeding 2 degrees inclination. Adjust the position with the adjustable feet.

Machine needs a minimum distance to micro wave ovens and inductive devices of 1m.

This machine is **FOR PROFESSIONAL USE IN BUSINESS ESTABLISHMENTS ONLY**, e.g. in restaurants, hotels, motels, cafeterias, shops, offices etc.

The machine is **NOT FOR OPEN-AIR USE**.

This appliance is not intended for use by persons (including children) with reduced physical, sensory or mental capabilities or lack of experience and knowledge, unless they have been given initial supervision or instruction concerning use of the appliance by a person responsible for their safety.

The machine is constructed for safe operation, meeting advanced engineering standards.
The machine is produced in accordance with the valid CE regulations and ISO 9001.

However, the use of the machine may be dangerous if

- you do not follow the present instructions of operation carefully
- unauthorised staff installs, maintains or repairs the machine
- there is improper use of the machine, not according to the original purpose thereof

The above may cause

- danger to correct, efficient, and reliable working of the machine
- danger to the payment system and to further assets of the operator or the user
- danger to life and limb

Concerning transport, installation, maintenance and repair please consult the latest edition of the following regulations and guidelines of your country:

- Regulations of the federation of electro-technology
- EU – guidelines (in EU - countries)
- Regulations concerning the prevention of accidents
- Guidelines of the professional union
- Trade regulations

The following points are to be considered:

- The prepared drinks are hot
- Some parts of the machine are hot
- Some parts of the machine are under high pressure (Hot water)
- The water flowing out during the cleaning process is hot
- Any change or modification of the machine is prohibited
  AEQUATOR AG does not assume any liability in such a case
- Store the machine in dry rooms and never in frosty environment
- Transport it only in the original packing

1.2 Machine View

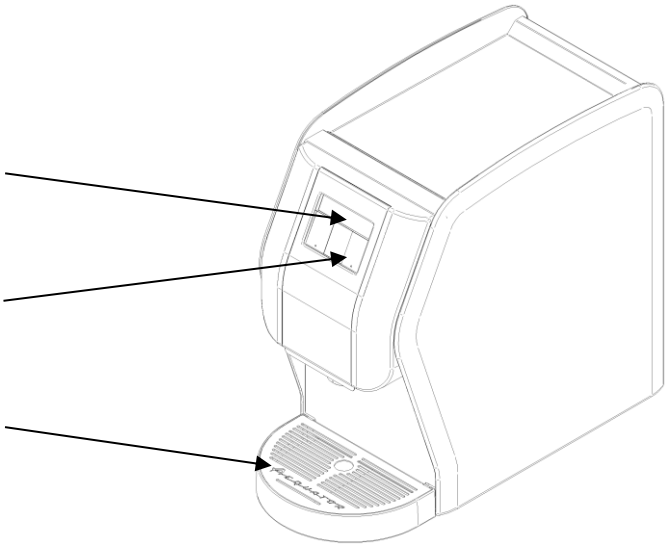

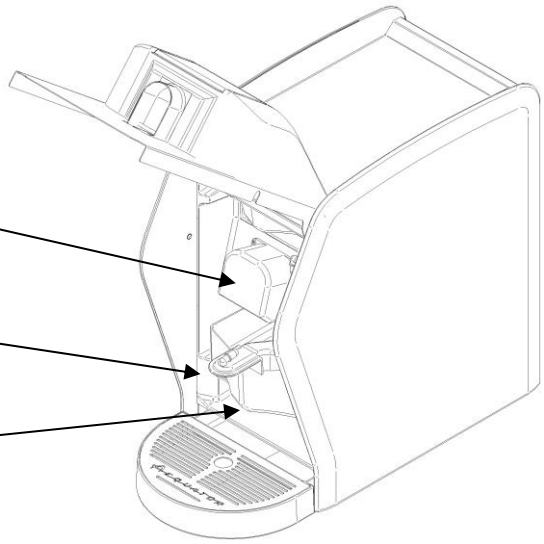

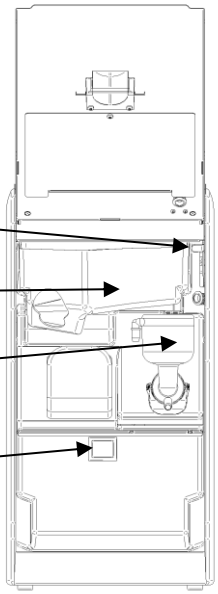

1.3 Dimension

Aequator AG
St.Gallerstrasse 229
CH-9320 Arbon
www.aequator.ch

Massblatt / Dimension / Mesures

Enduro

Dimension until mm (inch)

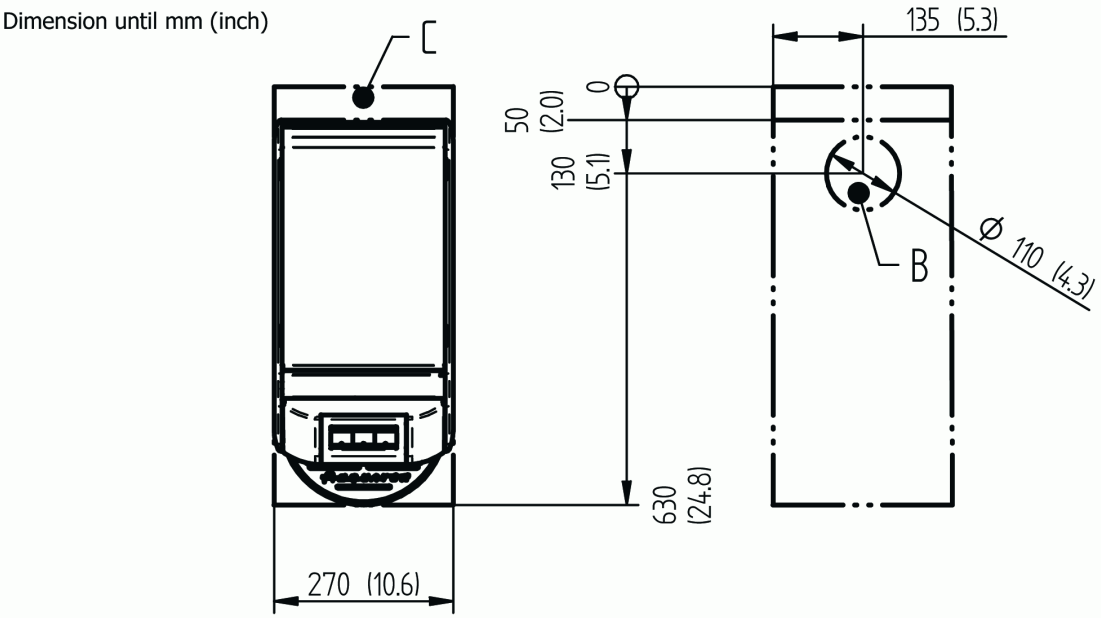

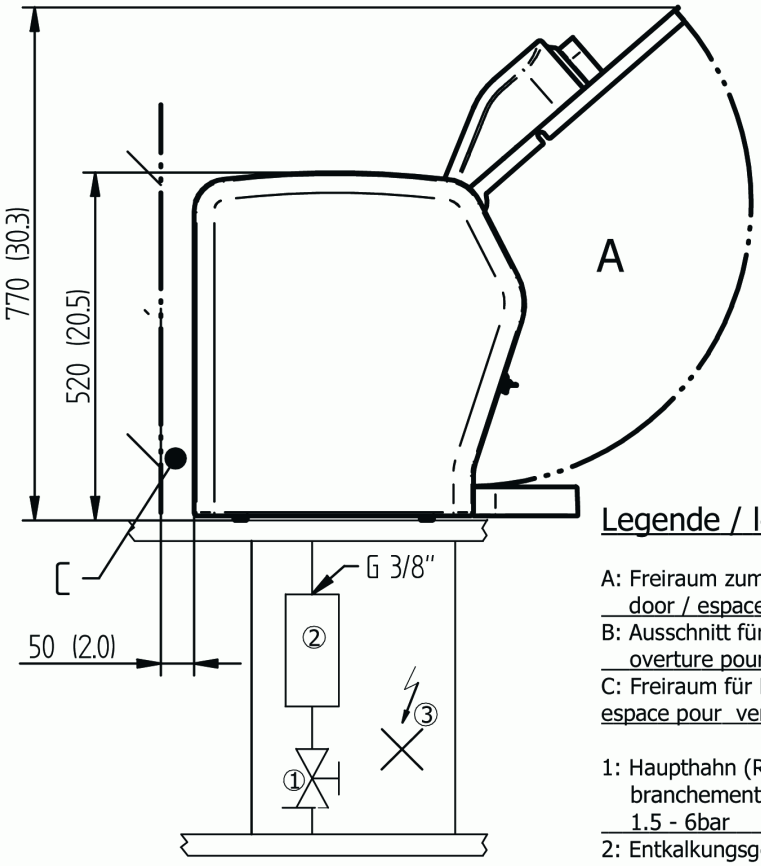

Legende / legend / légende

A: Freiraum zum öffnen der Türe / Free space to open the door / espace pour ouvrir la porte

B: Ausschnitt für Anschlüsse / opening for connections / overture pour connexions

C: Freiraum für Belüftung / Free space for ventilation / espace pour ventilation

1: Haupthahn (Rohwasser) / water connection / branchement d'eau
1.5 - 6bar

2: Entkalkungsgerät mit Partikelfilter / de-scaling device with particle filter / appareil anticalcaire avec filtre à particules

3: Elektrospeisung / electric supply / prise de courant
230V / 50 Hz / 3000W / 13A

2 Handling

The manufacturer does not assume any liability for damages caused by non-observance of the instructions below.

2.1 Installation

Please check before installing the machine:

- water connection
- electricity
- degree of hardness of the water

Unpacking the Machine

Check whether the machine is undamaged. If you have any doubts, do not operate the machine.
Recycle the packaging material.

The machine complies with IP20 and must be operated in dry rooms only!

This table top machine must not be operated on the floor!

The machine must be placed on a horizontal surface, not exceeding 2 degrees inclination. Adjust the position with the adjustable feet.

Water Connection

Connect the machine to your drink water system (Filter menu 2.1.4), observing the legal regulations of your country. The water pressure must be 0.1 to 0.6 MPa (1 to 6 bars).
Rinse the water tubes before connecting the machine, until the water is clean and clear, without dirt. Connect the machine using the hose delivered with the machine. Outside the machine there must be an easily accessible water tap to turn the water on and off.

Electricity

The machine is constructed for a one phase voltage of 230V AC. Before operating the machine, make sure the specifications indicated on the label correspond to your electricity network:

- Is the voltage range within the legal limits?
- Can the fuses take the required maximum load, and is the disconnection from the net between phase and neutral conductor guaranteed with a distance of a minimum of 3 mm between the wires?

The main plug must be easily accessible.

The power cord is firmly connected to the machine and must only be removed and replaced by electrical engineers. The exclusive use of cables of type HO5 RR-F, HO5 RN-F, HO5 VV-F, HO7 RN-F, with wire size of 3 x 1.5 mm^2 is a must.
The electric safety of the machine is only guaranteed if duly connected to a network with proper earth connection.

This safety measure must be guaranteed. If you have any doubts, have your connection checked by an electrical engineer.
It is strictly forbidden to use adapters, multiple plugs or extension power cords.

Before operating the machine make sure that the water connection is properly installed and that the water tap is open.

Water Filter / Water Softener
The standard machine is delivered without filter nor softener.
Phosphate filters may be used in case of hard water, or ion exchangers in case of very hard water.
A suitable water and particle filter must be placed between the water tab and the machine.
The manufacturer does not assume any liability for damages caused due to missing or improper use of water filters or softeners respectively.
A volume counter is integrated in the machine to facilitate timely replacement of the filters.

1. **Filling water system:**
   - Press a drink button
   - If water flows out of the outlet, you could stop by pressing a drink button again.

Water will come out of the outlet, max. 0.2 l

2. **Insert chocolate bag**

2.2 Operation

Basics

Operator basic / Menu 0:
Enter by opening the machine door

Operator advanced / Menu 1:
Enter password

Service basic / Menu 2:
Enter password

Service advanced / Menu 3:
Enter password

Drink buttons | **their functions**

<D2>..... ↵ Enter / Exit / confirmation
<D1>+<D3>..... entering code
<D1>..... - ← ↑ backwards / value -
<D2>..... + → ↓ forward / value +

Key assignment

D1	D2	D3
Drink 1	Drink 2	Drink 3
backwards value minus ← ↑ -	confirm ↵	forward value plus → ↓ +

2.3 User Menu

Start Up

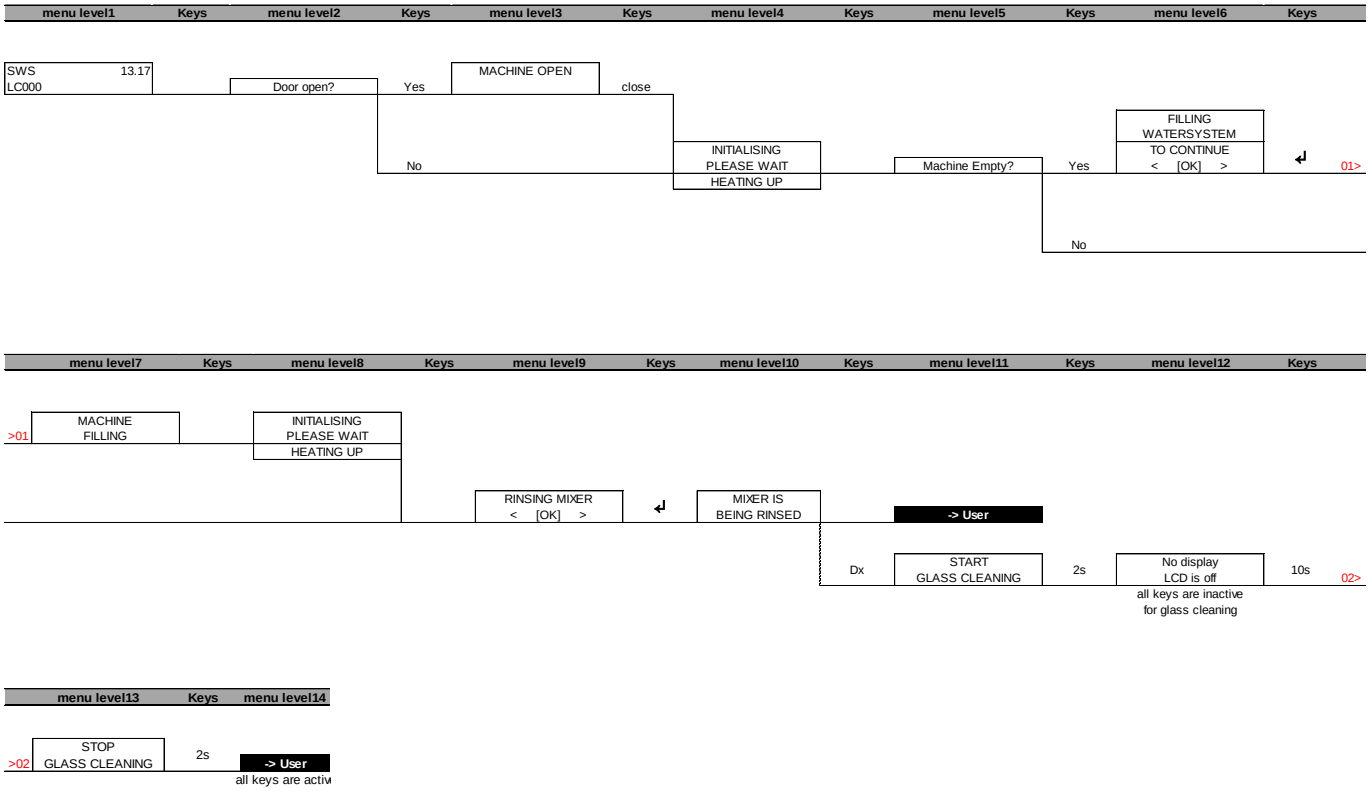

Menu	Description
Machine Empty?	The water system is empty. Press any drink button to replenish the system. Do not stop until water regularly flows out from the discharge.
RINSING MIXER < [OK] >	According to the machine software the machine needs rinsing.

Operator basic / Menu 0

PW = open the door

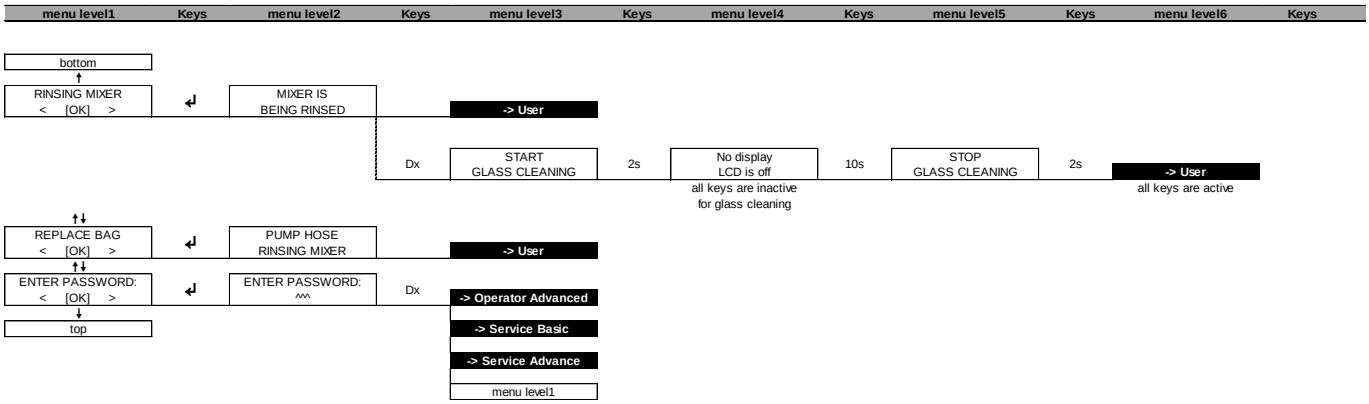

Menu	Description
REPLACE BAG < [OK] >	Menu for acknowledging bag replacement.

Operator advanced / Menu 1

PW = 113

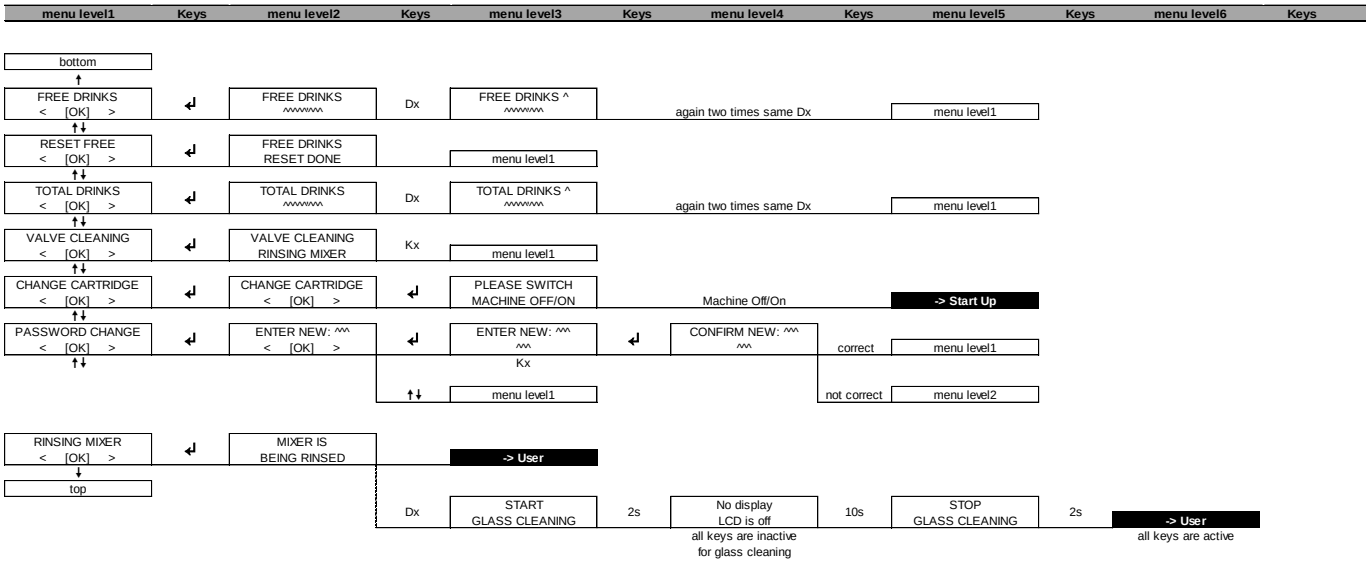

Menu	Description
FREE DRINKS < [OK] >	Menu for reading out free drinks.
RESET FREE < [OK] >	Menu for resetting free drinks.
TOTAL DRINKS < [OK] >	Menu for reading out the total drinks counter.
VALVE CLEANING < [OK] >	Menu for acknowledging valve cleaning.
CHANGE CARTRIDGE < [OK] >	Menu for acknowledging cartridge change.
PASSWORD CHANGE < [OK] >	Password input for accessing the technician menu. • For authorised persons only.

2.4 Engineers' Menu

Technician basic / Menu 2 Default Password = 131

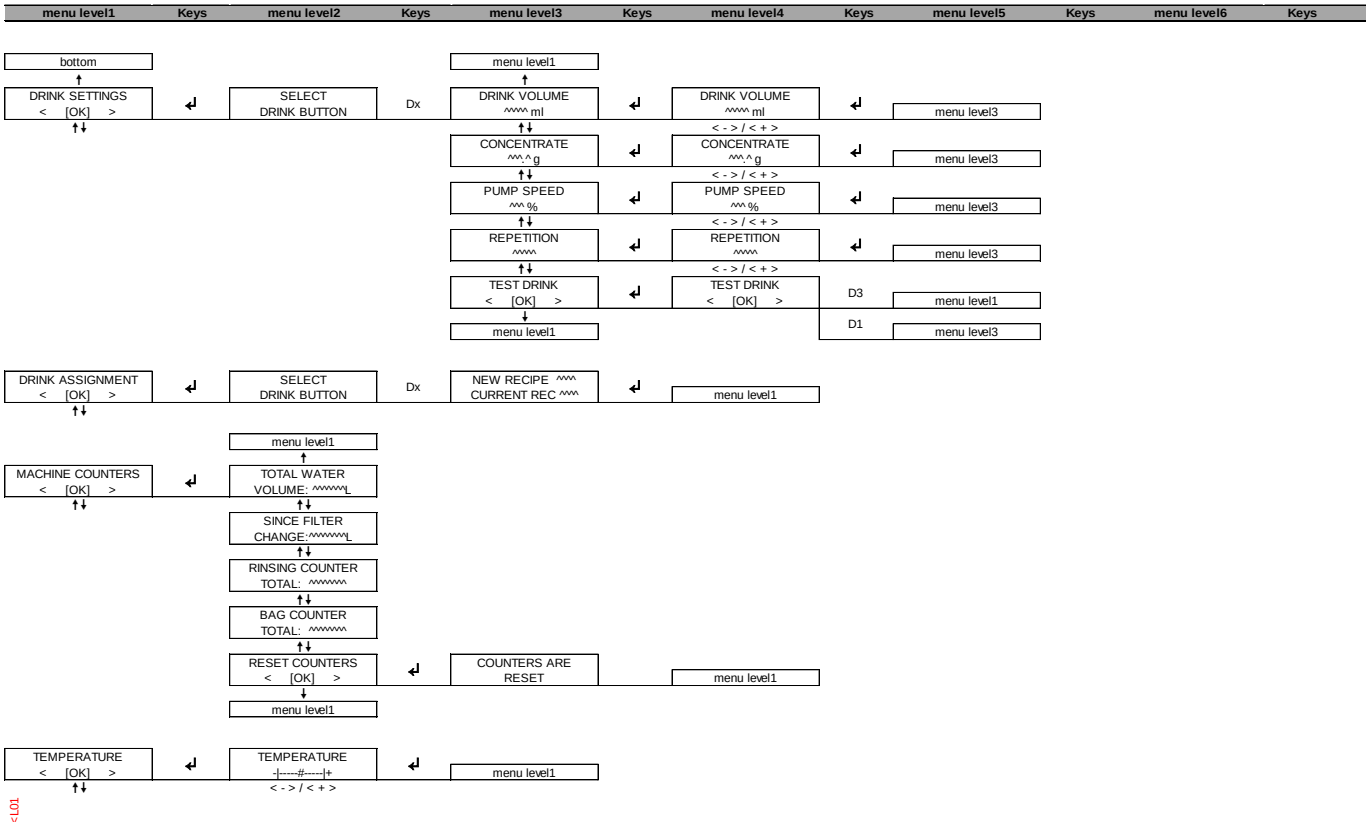

Menu	Description
DRINK SETTINGS < [OK] >	Menu for changing the recipe of the selected drink. **DRINK VOLUME** **CONCENTRATE** **PUMP SPEED** **REPETITION** **TEST DRINK**
DRINK ASSIGNMENT < [OK] >	Menu for assigning a recipe or a function.
MACHINE COUNTERS < [OK] >	Menu for reading out machine counters.
TEMPERATURE < [OK] >	Setting the base temperature. • Measure the temperature at the discharge and set the ideal temperature. • Each step will increase or decrease the thermoblock temperature by approx. 2°C.

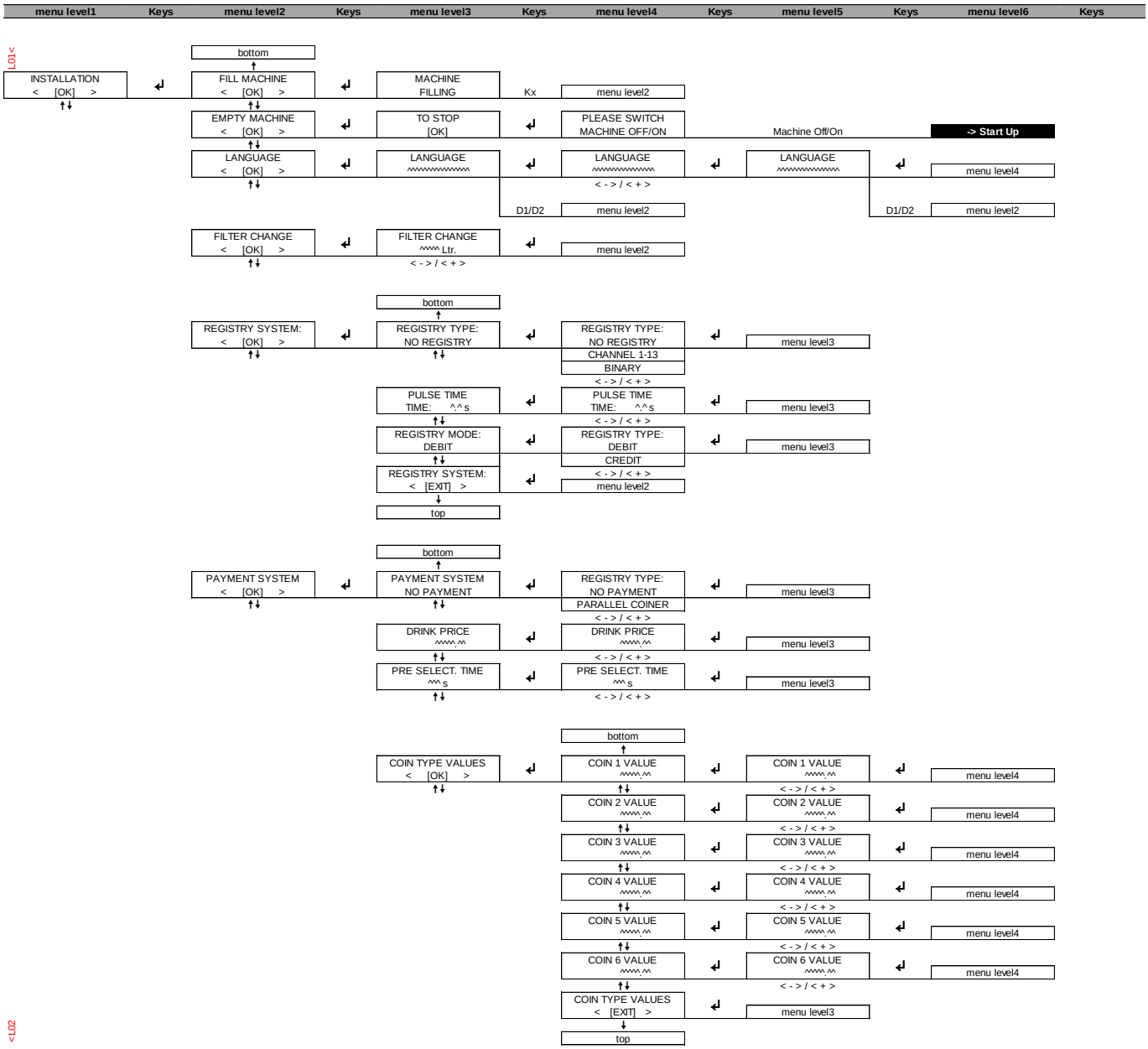

Menu	Description
FILL MACHINE < [OK] >	Menu for filling the machine.
EMPTY MACHINE < [OK] >	Menu for emptying the machine.
FILTER CHANGE < [OK] >	Setting the total water filter capacity in litres. The machine will calculate the water filter limits and display a warning on the basis of this value.
REGISTRY SYSTEM: < [OK] >	Activating and setting a registry system.
PAYMENT SYSTEM < [OK] >	Activating and setting a payment system.

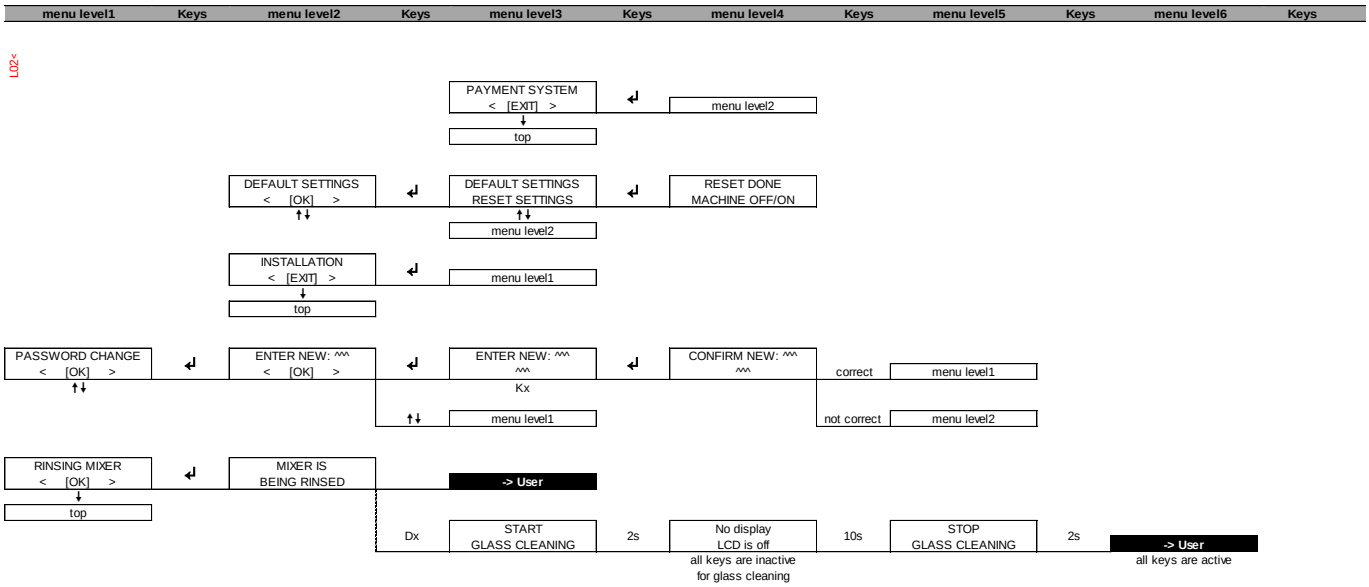
menu level1
Keys
menu level2
Keys
menu level3
Keys
menu level4
Keys
menu level5
Keys
menu level6
Keys
L02<
PAYMENT SYSTEM
< [EXIT] >
menu level2
top
DEFAULT SETTINGS
< [OK] >
DEFAULT SETTINGS
RESET SETTINGS
RESET DONE
MACHINE OFF/ON
menu level2
INSTALLATION
< [EXIT] >
menu level1
top
PASSWORD CHANGE
< [OK] >
ENTER NEW: ^^^
< [OK] >
ENTER NEW: ^^^
^^^
CONFIRM NEW: ^^^
^^^
correct
menu level1
Kx
menu level1
not correct
menu level2
RINSING MIXER
< [OK] >
MIXER IS
BEING RINSED
-> User
top
Dx
START
GLASS CLEANING
2s
No display
LCD is off
all keys are inactive
for glass cleaning
10s
STOP
GLASS CLEANING
2s
-> User
all keys are active

Technician advanced / Menu 3 Default Password = 331

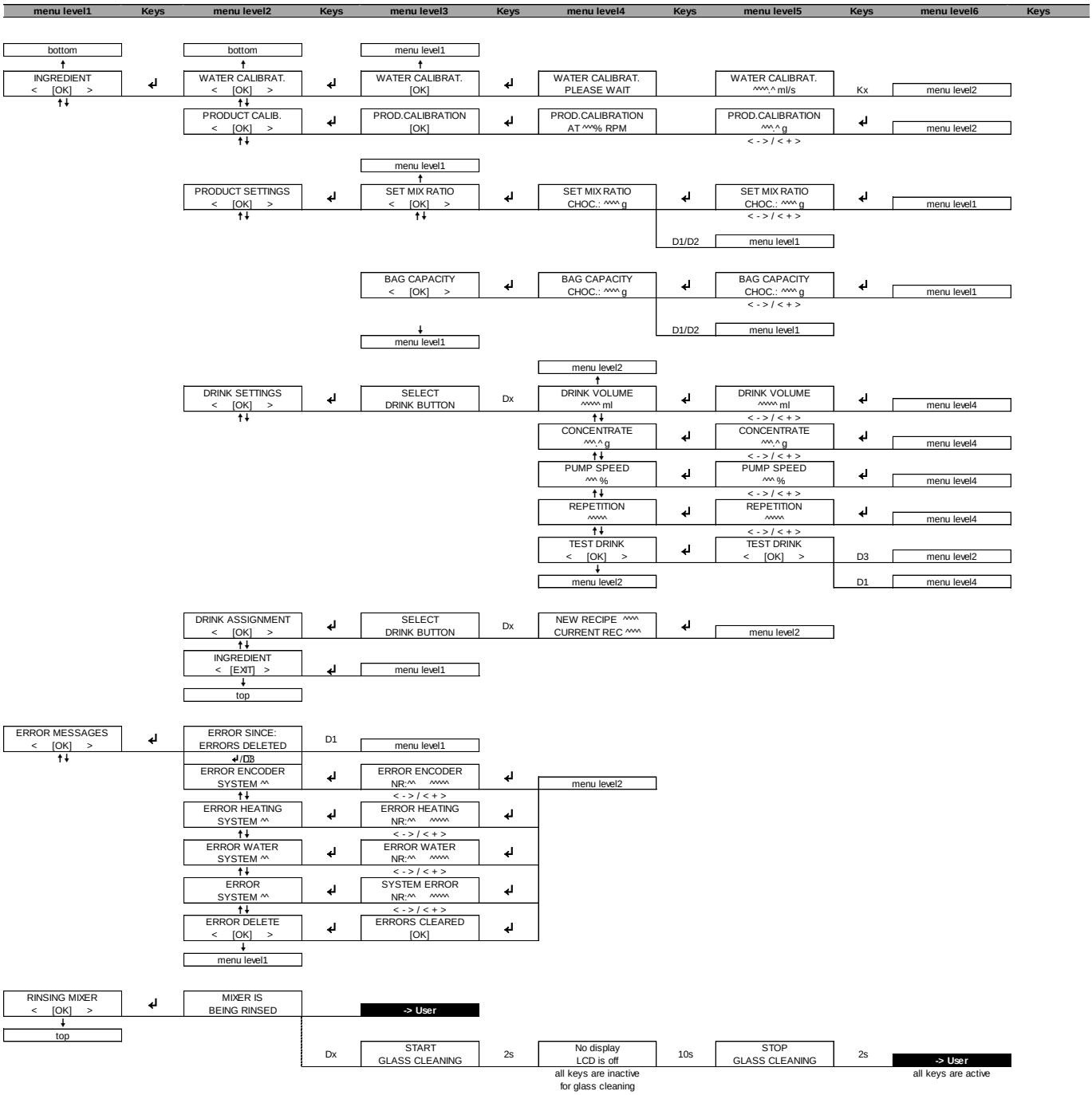

Menu	Description
WATER CALIBRAT. < [OK] >	Menu for water flow calibration.
PRODUCT CALIB. < [OK] >	Menu for product calibration.
PRODUCT SETTINGS < [OK] >	Menu for setting the mixing ratio.
ERROR MESSAGES < [OK] >	Menu for setting the drink settings.
RINSING MIXER < [OK] >	Menu for checking the error messages.

Glass Cleaning

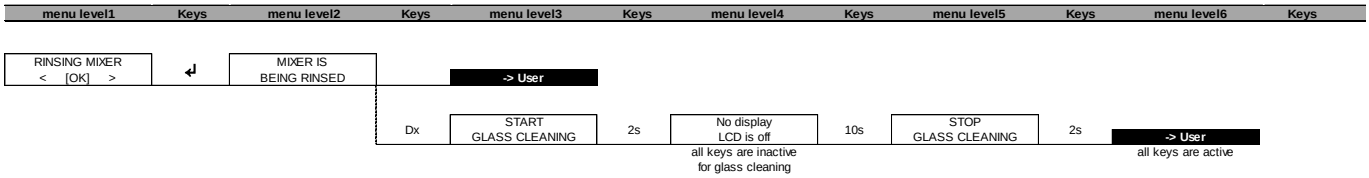

Menu	Description
START GLASS CLEANING	Menu for starting glass cleaning.

3 Servicing

3.1 Cleaning

Cleaning is compulsory with each servicing in order to prevent malfunctions and to enable the machine to work perfectly, without problems.

- Clean the interior of the machine
- Check and adjust – if necessary - the pressure reducing valve (water calibration, menu 3)

3.2 Service Work

Service Checklist:

- ☐ **Error messages:** check/delete
- ☐ **Outlet:** check condition
- ☐ **Drawer for bag:** check condition
- ☐ **Drip tray:** check condition
- ☐ **Mixer unit:** check mixer base, bowl adapter, seals, motor -> replace it if necessary
- ☐ **Machine cleaning:** do a whole machine cleaning

Final Work Checklist:

- ☐ **Modifications:** install available modification kits
- ☐ **Water hardness:** check it, check **filter (capacity** exceeded**!**, **setting**, over **1 year** old)
- ☐ **De-scaling counter**: reset if **filter** was replaced
- ☐ **Error counter** read/check/delete
- ☐ **Colour damage:** repair if possible
- ☐ **Test drinks, let the customer try them**
- ☐ **Customer/staff training**: Show them how to clean, fill containers, mixer cup etc.
- ☐ **Read error counter again**

3.3 Maintenance

Maintenance interval:
The reseller will work out this information according to their contract with the project owner.

Maintenance work:
The reseller will work out this information according to their contract with the project owner.

Maintenance parts:
The reseller will work out this information according to their contract with the project owner.

3.4 Required Service Tools

- Screwdriver torx 10/15
- Philips screwdriver
- Spanner wrench 5.5/10/12/14

4 Error Messages and how to solve them

4.1 Error Messages

Error message	Code	Description / Meaning	Solution
HEATER FAULT SYS ERROR	EH 281	Over temperature limit reached	- Check Control board: output might have a short circuit to phase - Check overheating fuses at thermo block - Check NTC fitting to thermo block
HEATER FAULT SYS ERROR	EH 282	NTC temperature sensor not connected	- Check NTC cable and connectors - Check NTC - Check control board
HEATER FAULT SYS ERROR	EH 283	NTC temperature sensor is out of range or shorted	- Check NTC cable and connectors - Check NTC - Check control board
HEATER FAULT SYS ERROR	EH 284	No temperature rising at heating up	- Check control board fuses - Check overheating fuse - Check control board
WATER FAULT SYS ERROR	EW 184	Volume not reached until timeout (no water flow for min 3 sec.)	- Check water supply - Check flow meter - Check lime scale in system

4.2 Electrical Connection Diagram

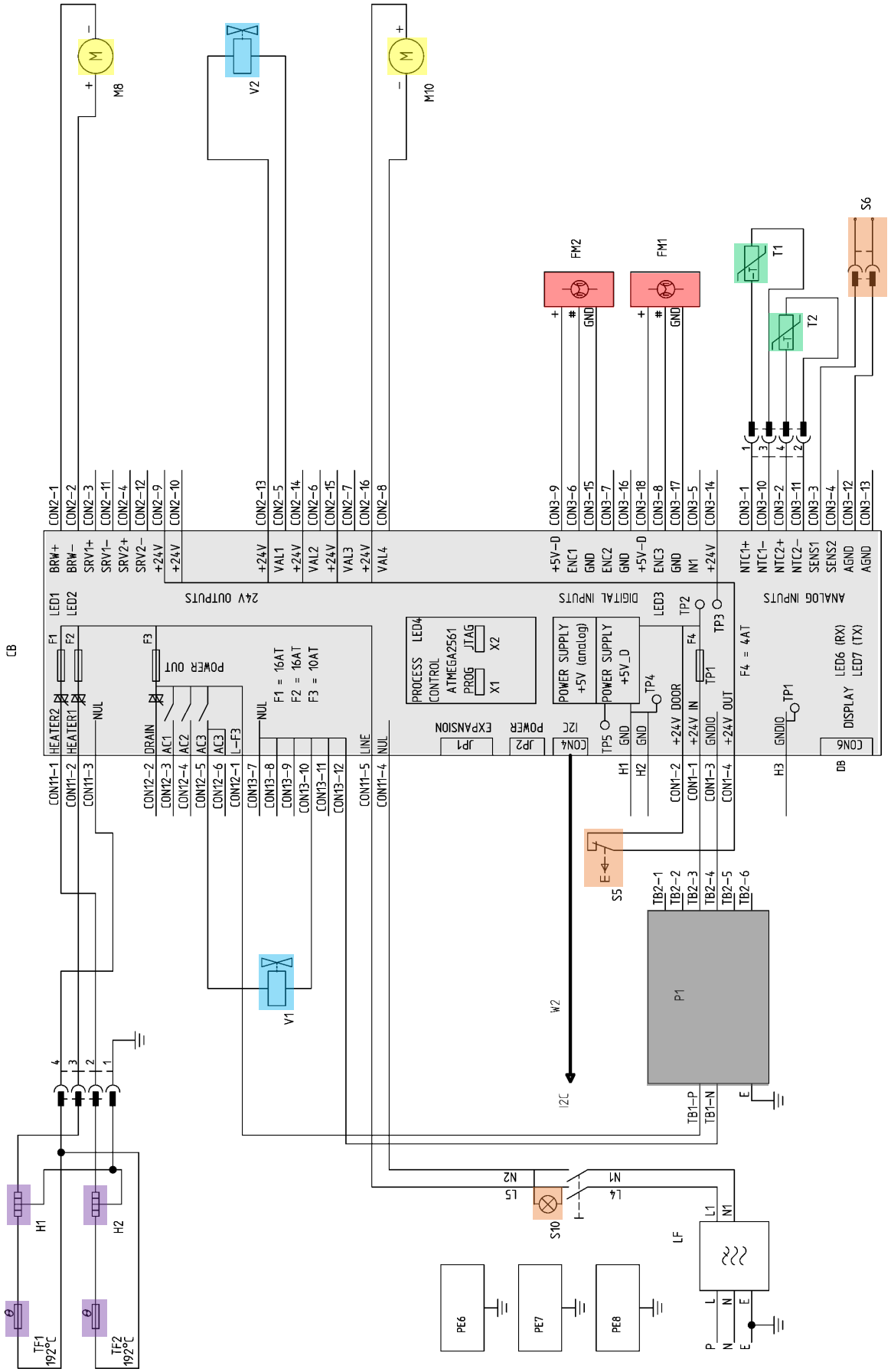

Description of the Electrical Connection Diagram	
Pos.	**Item**
FM1	Flow meter water
FM2	Flow meter chocolate
H1	Thermo block 1
H2	Thermo block 2
M8	Pump motor chocolate
M10	Mixer motor
P1	Power supply 230V AC/24V DC
S6	Sensor waste water
S5	Door switch
S10	Main switch
T1	Temperature sensor thermo block 1
T2	Temperature sensor thermo block 2
TF1	Thermo fuse heater1
TF2	Thermo fuse heater2
CB	Control board 3
V1	Inlet valve
V2	Instant valve

4.3 Control Board Top View

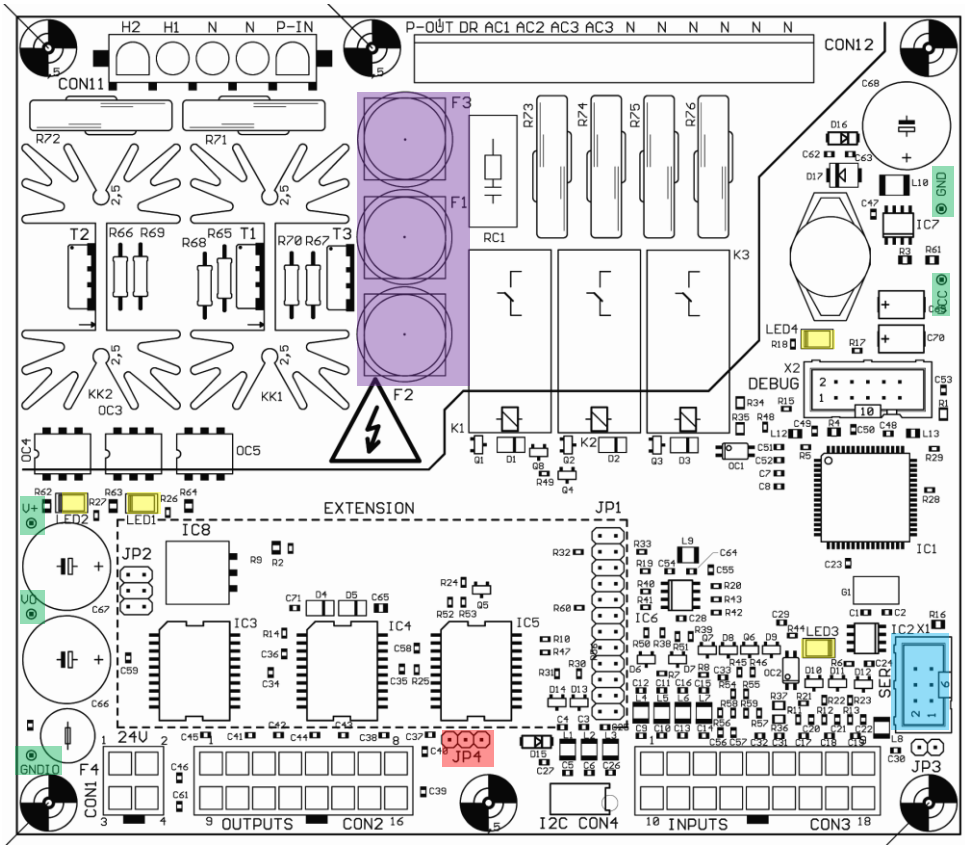

LED's			
Pos.	**Name**	**Function**	**Colour**
LED1	HEATER 1	Heater 1 ON	yellow
LED2	HEATER 2	Heater 2 ON	yellow
LED3	FLOW	Flow meter impulse (water flow)	yellow
LED4	RUN	System running 1Hz interrupt	yellow
Test points			
Pos.	**Name**	**Function**	**Level**
GNDI0	TP1	Power ground	0 VDC
V+	TP2	Power supply after fuse	+24 VDC
V0	TP3	Power supply after door switch	+24 VDC
GND	TP4	Power ground logic	0 VDC
VCC	TP5	Power supply logic	+5 VDC
Fuses			
Pos.	**Name**	**Function**	**Value**
F1	HEATER 1	Power supply heater 1	10 AT
F2	HEATER 2	Power supply heater 2	10 AT
F3	Actuators/Power supply	Outputs for Actuators and power supply	10 AT
Interface to upload/download programs			
Pos.	**Name**	**Function**	**Level**
X1	SER	Serial interface for upload/download	0-5 VDC
Jumper			
Pos.	**Name**	**Function**	**Value**
JP4	PWM4	Ampl. output for water pump	0-24 VDC

4.4 Display Board Rear View

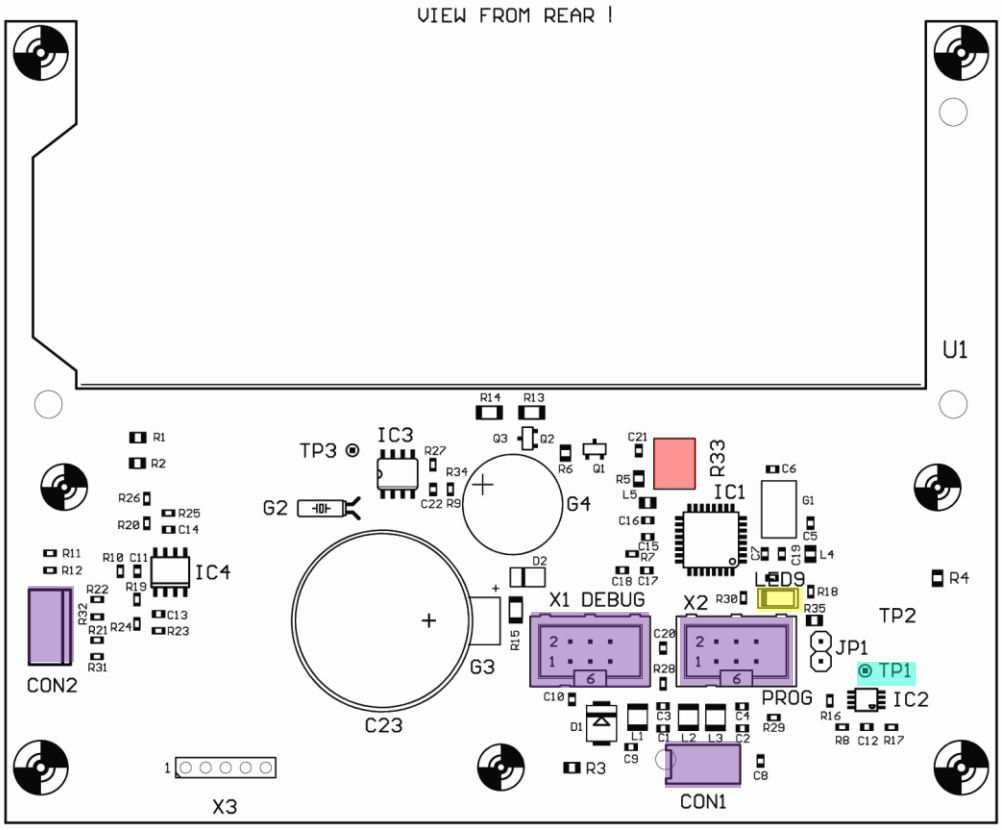

LED's			
Pos.	**Name**	**Function**	**Colour**
LED9	RUN	System running 1Hz interrupt	yellow
Potentiometer			
Pos.	**Name**	**Function**	**Level**
R33	CONTRAST	Contrast adjustment LCD	0-5 VDC
Test points			
Pos.	**Name**	**Function**	**Level**
TP1	WP	Write protect EEPROM	5 VDC
TP2	none		
Connectors			
Pos.	**Name**	**Function**	**Level**
CON1	I2C	I2C Bus	0-5 VDC
CON2	not assembled		
X1	DEBUG	SPI interface for boot loader	0-5 VDC
X2	PROG	Serial interface for upload/download	0-5 VDC

4.5 Water Flow Diagram

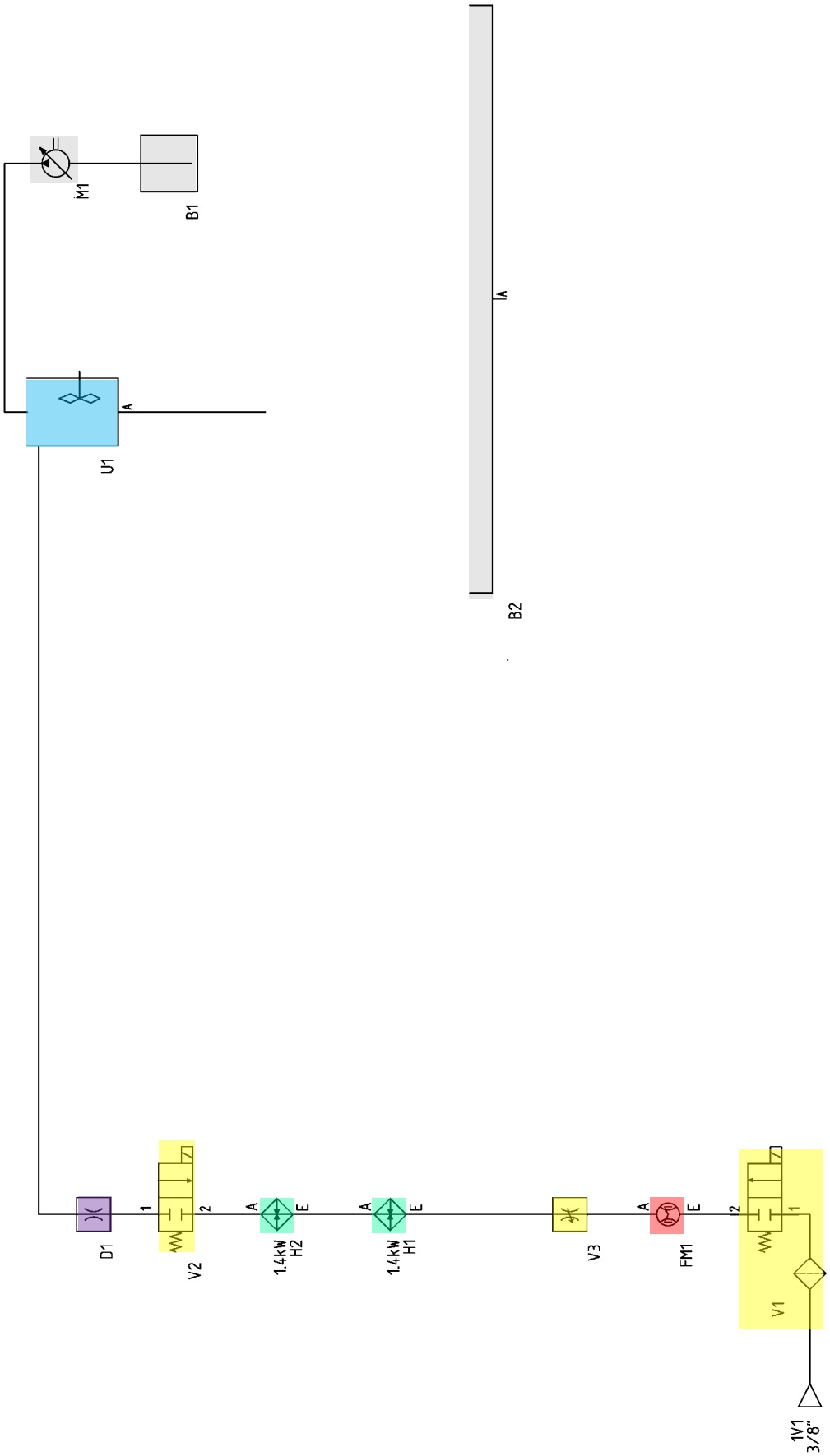

Description of the Water Flow Diagram		
Pos.	**Description**	
	Water connection	¾" Gas
B1	Concentrated product bag	
B2	Drip tray	
D1	Nozzle	Ø 1.3mm
FM1	Flow meter water	
H1	Thermo block 1	1400W
H2	Thermo block 2	1400W
M1	Pump chocolate	
U1	Mixer	
V1	Inlet valve	
V2	Instant valve	
V3	Pressure reduction valve	

5 Technical Data

Dimensions:	
Width:	270 mm
Depth:	578 mm
Height:	522 mm
Weight:	
Total weight:	15 kg
Water connection:	
Fresh water connection:	¾"Gas
Water pressure	0.1–0.6 MPa (1-6 bar)
Electricity:	
Operating voltage:	230 V 50/60 Hz
Fuse protection:	13A
Power connection:	3000 W
Conditions:	
Working temperature:	5-40° C

Never expose your machines to temperatures below freezing.

6 Declaration of Conformity

AEQUATOR
Swiss made coffee machines

EU DECLARATION OF CONFORMITY
EU KONFORMITÄTSERKLÄRUNG
UE DÉCLARATION DE CONFORMITÉ

Product model/product:
Produktmodell/ Produkt:
Modèle de produit/produit:

HOT CHOCOLATE MACHINE F30
Lima, Enduro

Name and address of the manufacturer or his authorised representative:
Name und Anschrift des Herstellers oder seines Bevollmächtigten:
Nom et adresse du fabricant ou de son mandataire:

AEQUATOR AG
St. Gallerstrasse 229
CH-9320 Arbon
SWITZERLAND

This declaration of conformity is issued under the sole responsibility of the manufacturer.
Die alleinige Verantwortung für die Ausstellung dieser Konformitätserklärung trägt der Hersteller.
La présente déclaration de conformité est établie sous la seule responsabilité du fabricant.

Object of the declaration:
Gegenstand der Erklärung:
Objet de la déclaration :

Machine for dispensing hot drinks
Maschine zur Ausgabe heisser Getränke
Machine pour la distribution de boissons chaudes

The object of the declaration described above is in conformity with the relevant Union harmonisation legislation:
Der oben beschriebene Gegenstand der Erklärung erfüllt die einschlägigen Harmonisierungsrechtsvorschriften der Union:
L'objet de la déclaration décrit ci-dessus est conforme à la législation d'harmonisation de l'Union applicable:

EMC Directive 2014/30/EU
LVD Directive 2014/35/EU
RoHS Directive 2011/65/EU

References to the relevant harmonised standards used or references to the other technical specifications in relation to which conformity is declared:
Angabe der einschlägigen harmonisierten Normen, die zugrunde gelegt wurden, oder Angabe der anderen technischen Spezifikationen, in Bezug auf die die Konformität erklärt wird:
Références des normes harmonisées pertinentes appliquées ou des autres spécifications techniques par rapport auxquelles la conformité est déclarée:

EN 50581:2012	EN 60335-1:2012
EN 55014-1:2015	EN 60335-75:2012
EN 55014-2:2015	EN 61000-3-2:2014
EN 55022:2010	EN 61000-3-3:2014

Signed for and on behalf of:
Unterzeichnet für und im Namen von:
Signé par et au nom de:

Arbon, 14.04.2016

Marcel Lendenmann, CEO
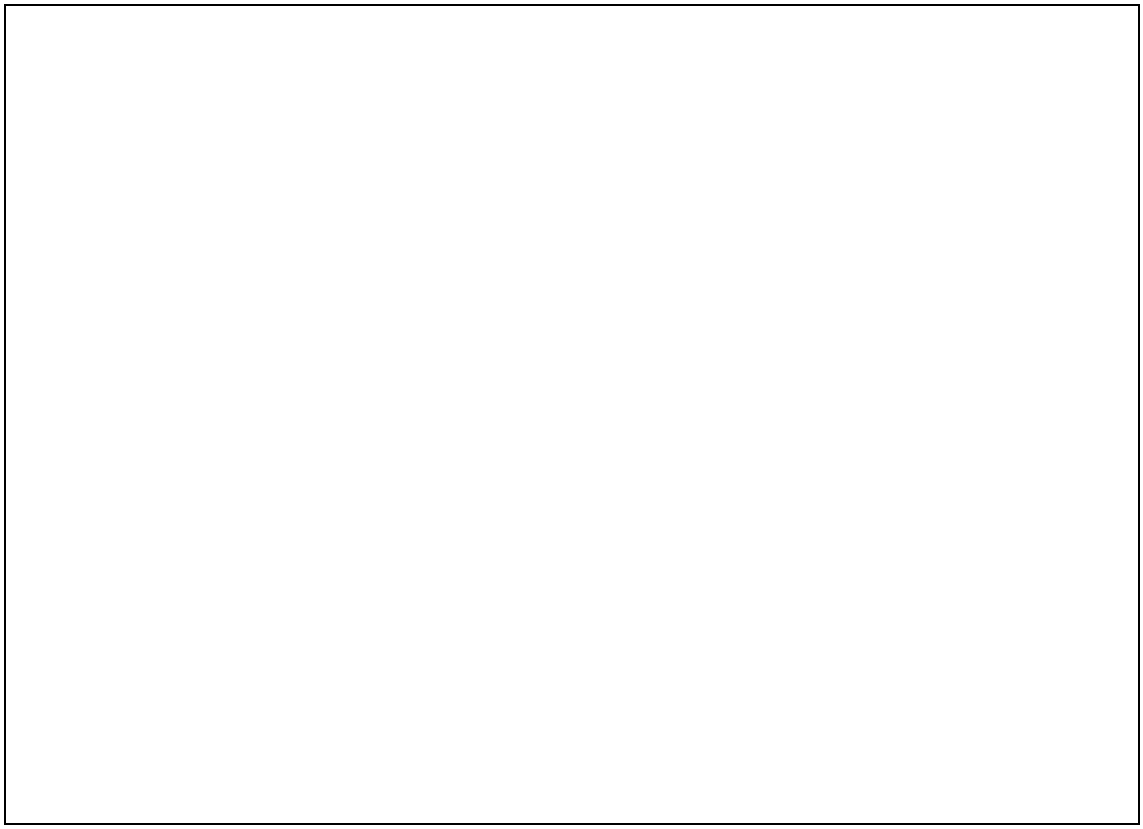
7 Your Service Partner